V.P. SERGIENKO, S.N. BUKHAROV, A.V. KUPREEV

RESEARCH

A Study of the Influence of Structure of Composite Materials on the Vibration of Frictional Pairs

The results of experimental investigations of vibroacoustic phenomena occurring on the frictional contact are presented to achieve a comprehensive understanding of vibration causes in heavy-loaded brakes of dump trucks. The method of the laser Doppler vibrometry has been employed to measure the normal vibration velocity of the rubbing solids. The mechanisms and regularities of vibration under a stationary friction of solid bodies are discussed.

Keywords: Friction, Composite, Vibration

1. INTRODUCTION

Vibroacoustic characteristics turn to be a crucial factor in ensuring competitiveness of modern machinery. The interest to investigations in this domain is underpinned by the ecological aspect, specifically after the European Economic Committee has referred the noise generated by the mechanical systems to as the ecological parameter of critical importance.

The acoustic radiation generated at frictional interaction, especially at nonstationary friction modes, belongs to most intractable problems of transport engineering. Notice that, above 60% of complaints about new cars in Germany are connected with noise and vibration, brake noise is also the main reason of reclamations to car manufacturers in the USA [1].

The problem of lowering the level of vibrations and acoustic emission is solved in part by the use of novel frictional materials (FM) with improved vibration-absorptive capacity or by refining design of the braking system. When designing brake units a researcher should first select a frictional material proceeding from a number of criteria, among which are the friction coefficient, wear resistance, braking efficiency, ecological safety and some other for which noise and vibration are the major contributing parameters [2].

V.P. Sergienko, S.N. Bukharov, A.V. Kupreev
V.A. Belyi Metal-Polymer
Research Institute of NASB,
32A Kirov Str., 246050 Gomel, Belarus,
sergienko_vp@mail.ru

The present work is aimed at analyzing the effect of the formula of frictional composite materials upon vibration characteristics of the friction joints in the course of their rubbing.

2. MATERIALS AND METHODS

There exists a series of up-to-date methods of vibroacoustic diagnostics, to which we should relate, first of all, the non-contact ones: electronic speckle pattern interferometry (ESPI) and laser Doppler vibrometry (LDV). ESPI presents a holographic procedure enabling one to measure deformations of various objects under versatile loading conditions [3]. The holographic methods are distinguished by a high resolvability (up to 0.05 μm), whereas their drawback is rather costly and intricate equipment. The laser Doppler vibrometers make it possible to obtain vibration velocity fields for individual components of the braking system in case it is hard to mount a contact pickup or it fails to measure with a needed accuracy. The recorded experimental data are further used for the modal analysis of brake designs, computation of sound radiation intensity and modeling of vibration in brakes [4].

The method of laser vibrometry was used for experimental studies of the effect of FM composition on the vibration level in friction joints. The objects of investigations were asbestos-free frictional composite materials incorporating thermosetting binders, organic and mineral fibers, dispersed fillers and structural modifiers. The main (by mass) dispersed fillers were barium sulfate and

transient metal oxides, the fibrous fillers were commercial basalt fibers. Both plastic and viscoelastic properties of the materials were regulated via modification of the binder by structural plasticizers, namely rubbers, liquid of cashew shell and a mixture of fatty acid triglycerides (stearic, oleic, linoleic and linolenic). The samples for tribological tests were manufactured by the forward extrusion.

A standard friction testing machine was used for the experiments.

The triboengineering testing followed the shaft-on-partial insert geometry (Fig. 1). The friction pair consisted of a 40 mm in diameter and 10 mm wide roller made of SCh20 cast iron and a sample of FM with a polymer matrix. The friction area was $2 \cdot 10^{-4}$ m^2. The specific load on the test samples was varied within P = (0.5 – 2.0) MPa, sliding velocity – ϑ= (0.5 – 1.5) m/s.

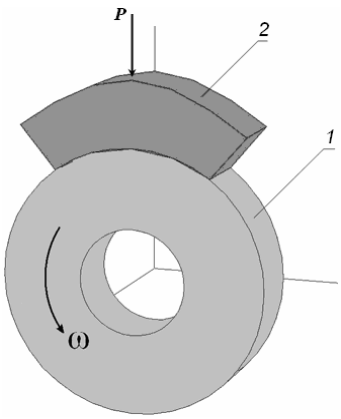

Figure 1. Friction pair:
1 – metal counterbody; 2 – FM sample

The vibration parameters (vibration velocity and vibration acceleration) were measured by both contact and non-contact methods. The laser vibrometer Ometron used in the tests is a highly accurate universal instrument for contactless measuring of vibration. This specificity of the vibrometer has been realized during the experiment when measuring vibration directly on the rotating shaft, which assisted in abating the error at recording the vibration signal.

3. DISCUSSION OF THE RESULTS

Figure 2 presents the vibration velocity spectra recorded at a given moment by the laser vibrometer and a contact pickup. The contact pickup was a triaxial piezoelectric accelerometer DeltaTron.

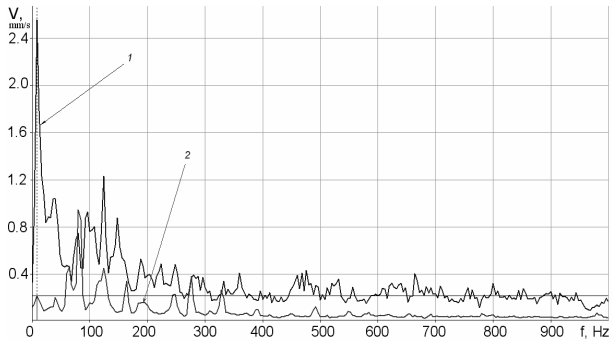

Figure 2 Vibration velocity spectra recorded by laser vibrometer (1) and accelerometer (2)

An amplitude peak of the vibration velocity spectrum at 8 Hz frequency obtained by the accelerometer is evidently carrying an information on the rotation frequency of the shaft. Within the limits of accepted deviations, it corresponds to a preset frequency of 480 rpm. Hence, the spectrum recorded by the contact pickup distorts the real pattern of vibration in the friction pair.

The authors have elaborated the methods of improving vibroacoustic characteristics of the friction pairs on the basis of materials science by creating a friction material structure possessing a perfect damping ability and a stable friction coefficient. The frictional materials of a similar composition but different hardness altered by certain technological processes were subjected to testing. The task of raising efficiency of vibration absorption by the FM has been solved by structural modification of the binder.

It has been found out that stabilizing of the friction coefficient assists in reducing the level of vibroacoustic activity during friction. We have also established in the experiments that the frequency and amplitude of oscillations tend to increase with growing hardness of the FM.

The spectra in Figure 3 illustrate that the vibration level in a friction pair is a function of the FM composition, providing the loading conditions are the same. The FM with a tough unmodified structure (Fig. 3, material 1) promotes the appearance of the low-frequency vibration to greater degree. The vibration velocity level of the friction pair from an unmodified material is twice till 2.7 times as high as that of the pair from a modified frictional material (Fig. 3, material 2), under the frequency being up to 300 Hz.

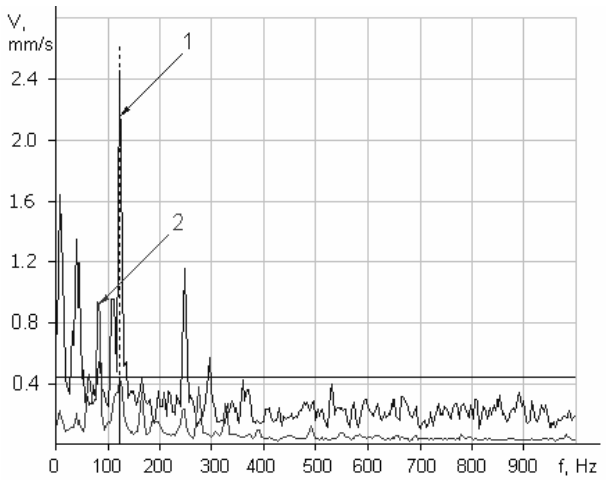

Figure 3 Vibration velocity spectra of a friction pair containing unmodified composite (1) and a composite material with a modified structure (2): 1 – hardness 35 HB; 2 – hardness 20 HB

The effect of the curing degree of the thermosetting matrix of the frictional composites upon the magnitude and stability of the friction coefficient has been studied. The authors have also examined the vibration variations under both stationary and nonstationary friction modes. The vibration and noise level under the stationary friction mode can be described by a curve with a maximum. A maximum on the curve of the vibration level versus cure degree of the binder appears only in the presence of the rubber phase in the binder composition, and a characteristic level of the vibroacoustic parameters is not reached instantaneously but is developing in time.

The kinetics of vibration variations of the friction pair under varying cure degree of the polymer matrix was found to be dependent on at least two processes, one of which contributes to the friction coefficient value, the other being responsible for the material structuring.

The results obtained were used to develop frictional composites on the organic matrix base for multidisc oil-cooled brakes of dump trucks of 75 – 110 ton carrying capacity

Vibration processes generated in the test bench for testing multidisc brakes have been studied experimentally. These vibrations of the test bench are a result of self-oscillations that appear when the frequency of frictional oscillations coincides with the natural frequency of the bench. To study the effect of the properties of FM on vibrations of the bench, two types of FM of different hardness were subjected to testing. As it is presented in Fig. 4, the harder material displays a considerable growth of oscillation amplitude of the braking torque as the pressure in the bench drive increases. The material with a lower hardness having a modified structure of the polymer binder shows essentially less oscillation amplitude of the friction torque, while vibrations in the bench were absent at all, as it is confirmed by Fig. 5.

The technique of manufacturing the frictional discs of brakes using a modified frictional material was regulated so as to make hardness of the friction layer about 20 -22 HB.

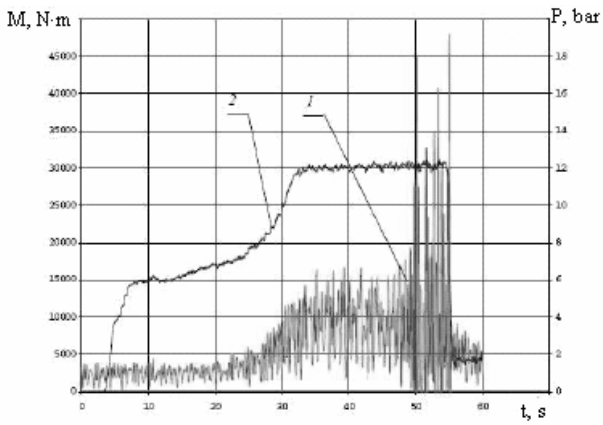

Figure 4 Variation kinetics of the braking torque (1) and pressure in the brake gear (2) for the brake pad material with unmodified structure

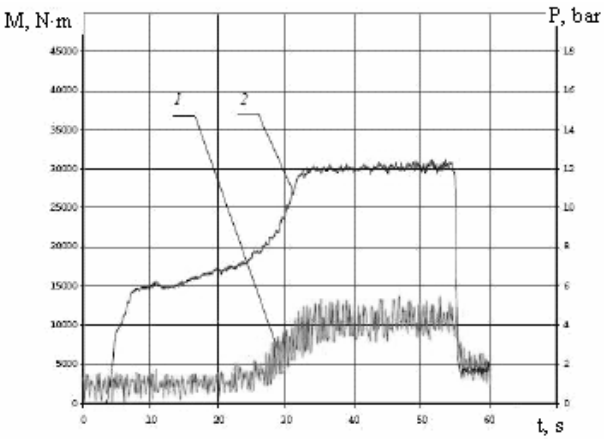

Figure 5 Variation kinetics of the braking torque (1) and pressure in the brake gear (2) for the brake pad material with a plasticized structure of the polymer binder.

REFERENCES

[1] Want a Quieter Life? The Latest Acoustic Solutions Will Help // International Sound and Vibration Magazine from Brüel & Kjær No. 1, 2006, p. 12.

[2] Mowka R. Structured Development Process in Stages of OE-Projects involving with Western European Car Manufacturer // Proc. 5-th International symposium of friction products and materials. Yarofri-2003. Yaroslavl, Russia, 2003, p. 229.

[3] Krupka R., Ettemeyer A. Brake Vibration Analysis with Three-Dimensional Pulsed ESPI // Experimental Techniques, March/April 2001, p 38.

[4] Savitsky V.N., Sergienko V.P., Bukharov S.N. Vibroacoustic diagnostics of tribological objects under unsteady friction conditions. Proc. 26th Int. conf. Slavpolycom, Yalta, 2006, p. 406.